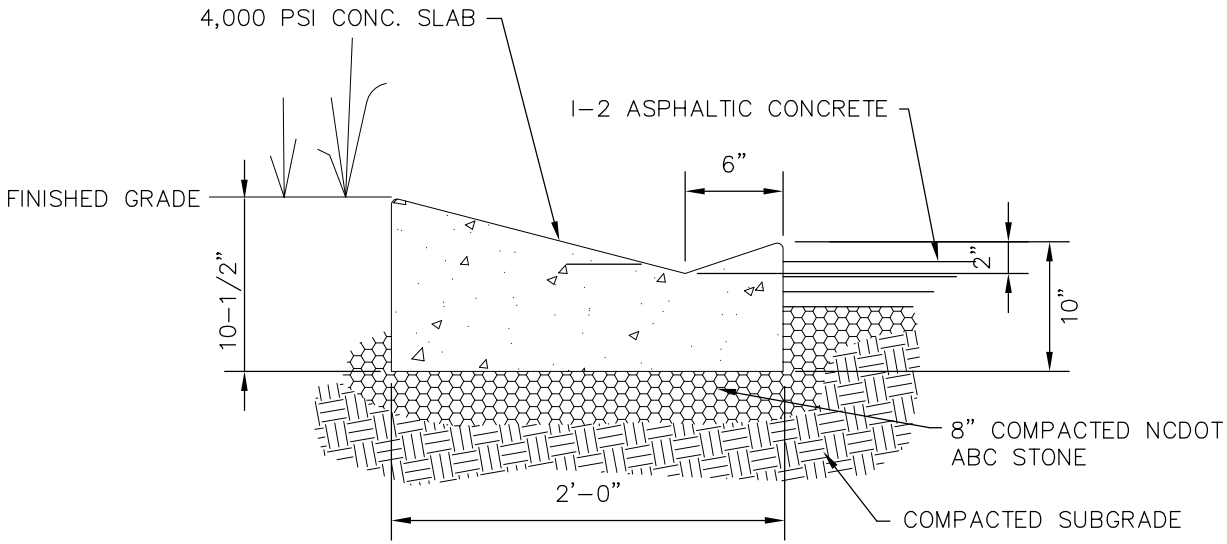

10' INTERVALS IN CONCRETE CURB.

INTERVALS AND AT RIGID STRUCTURES.

24" VALLEY CURB DETAIL

REVISIONS	
DATE	DESCRIPTION
12/08/98	

ASHEVILLE

CITY OF ASHEVILLE, N.C.
ENGINEERING DEPARTMENT

VALLEY CURB DETAIL

STD. No.

3.10A