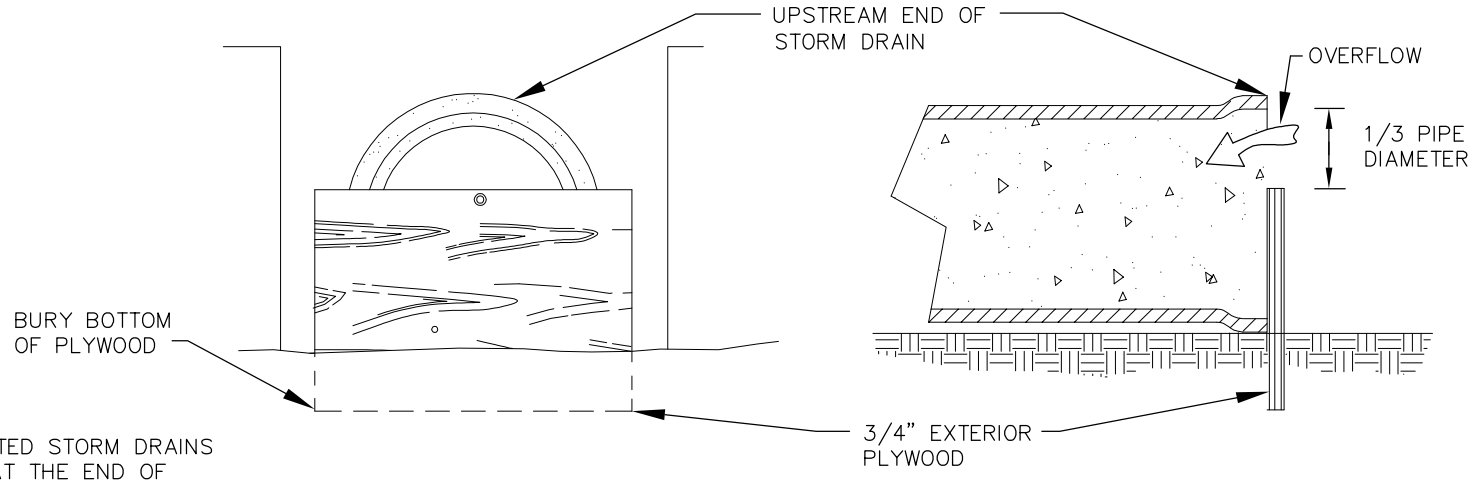

NOTE: ALL PARTIALLY COMPLETED STORM DRAINS SHALL BE PROTECTED AT THE END OF EACH DAY IN ACCORDANCE WITH THESE DETAILS.

PLYWOOD INLET PROTECTION

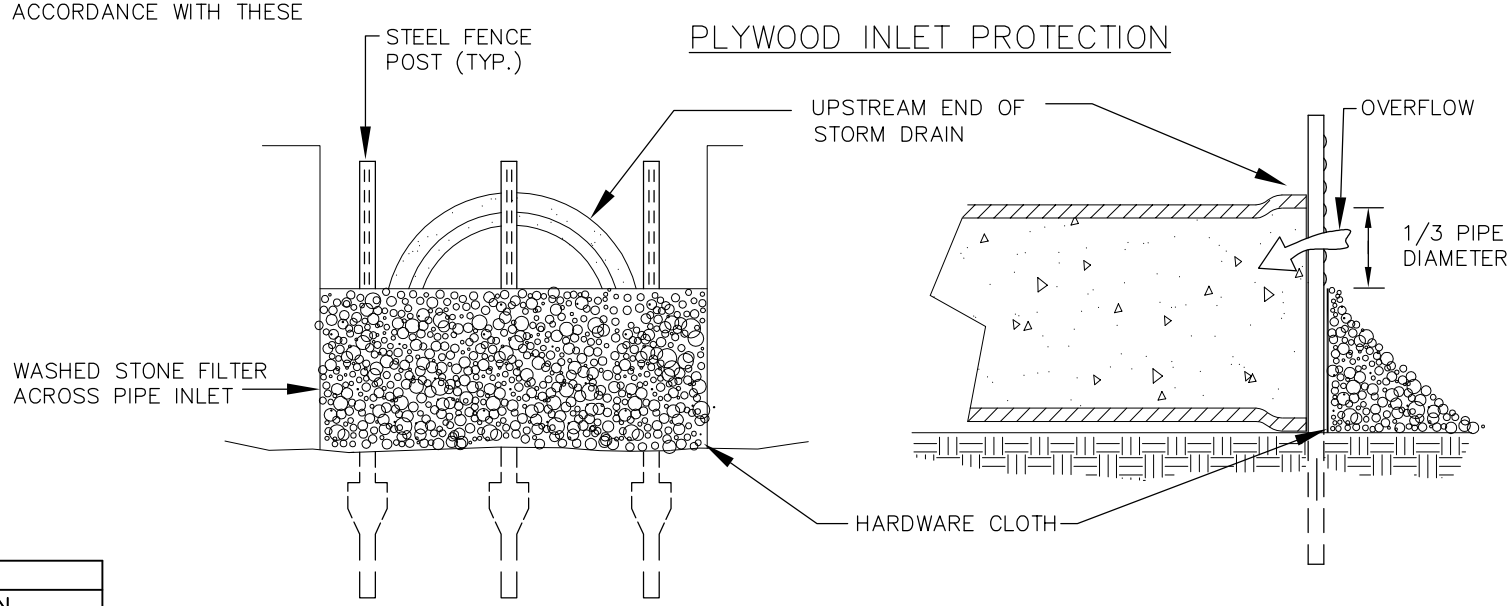

STONE FILTER INLET PROTECTION

REVISIONS	
DATE	DESCRIPTION

ASHEVILLE

CITY OF ASHEVILLE, N.C.
ENGINEERING DEPARTMENT

PIPE INLET PROTECTION (PLYWOOD AND STONE)

STD. No.

4.12