SHALLOW TYPE
(5 FEET OR LESS IN DEPTH)

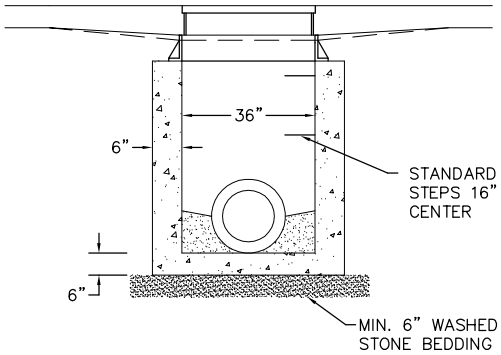

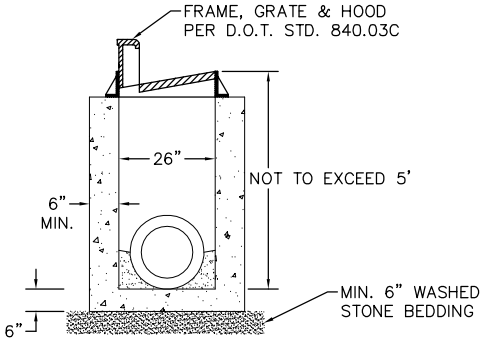

NOTE:
1. CONCRETE SHALL BE 4000 PSI MIN. FOR ALL PRECAST CONCRETE CATCH BASINS.
2. PRECAST CONCRETE STRUCTURES MAY ONLY BE INSTALLED TO DEPTHS CERTIFIED AS ACCEPTABLE BY THE MANUFACTURER.
3. "WAFFLE" BOXES ARE ACCEPTABLE FOR SHALLOW TYPE CATCH BASINS.

INTERMEDIATE TYPE (4'X4')
(5 FEET TO 20 FEET IN DEPTH)

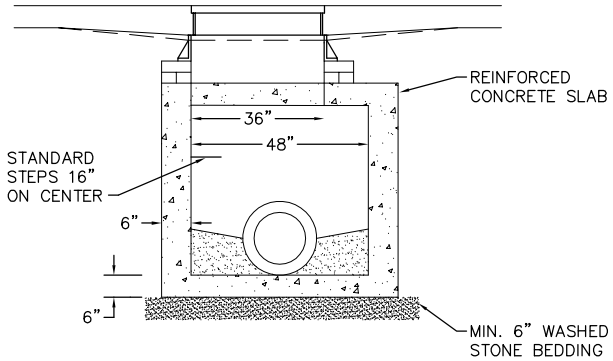

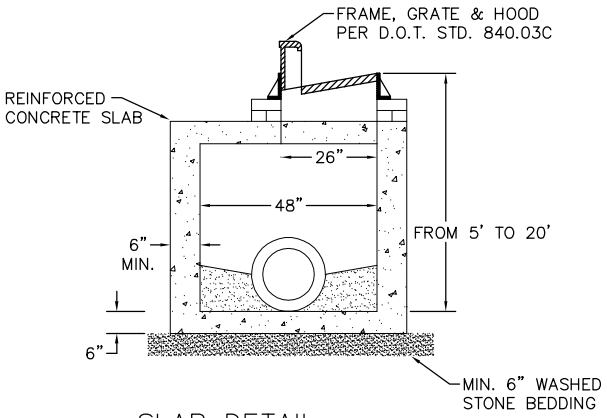

SLAB DETAIL

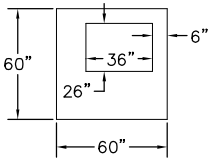

SLAB THICKNESS AND REINFORCEMENT FOR SOIL AND TRAFFIC LOADING BY AN ENGINEER

DEEP TYPE (5'X5')
(OVER 20 FEET IN DEPTH)

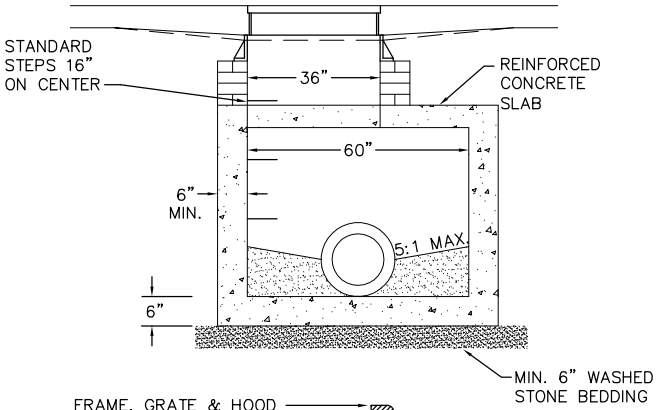

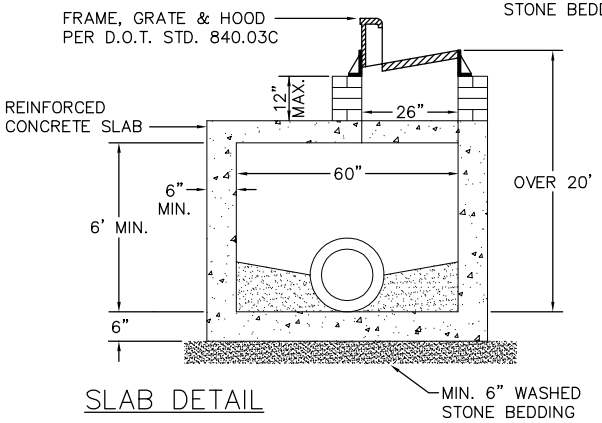

SLAB DETAIL

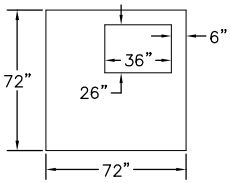

SLAB THICKNESS AND REINFORCEMENT FOR SOIL AND TRAFFIC LOADING BY AN ENGINEER

SHEET 2 OF 2

REVISIONS	
DATE	DESCRIPTION

ASHEVILLE

CITY OF ASHEVILLE, N.C.
ENGINEERING DEPARTMENT

PRECAST CONCRETE CATCH BASIN

STD. No.
8.03