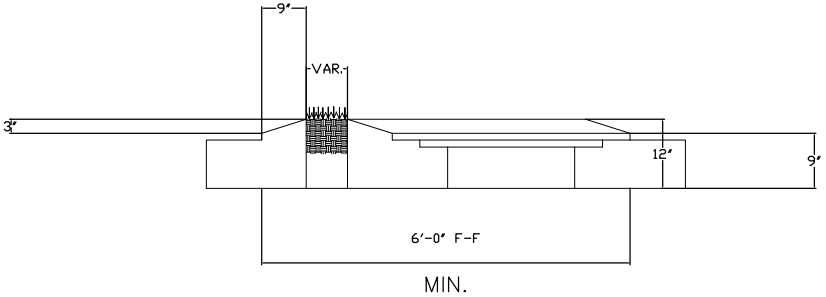


SECTION – BB

FOR USE WITH NCDOT STD. 840.14B AND 840.15C
FOR ISLAND DIMENSIONS SEE NCDOT STD. 852.01B

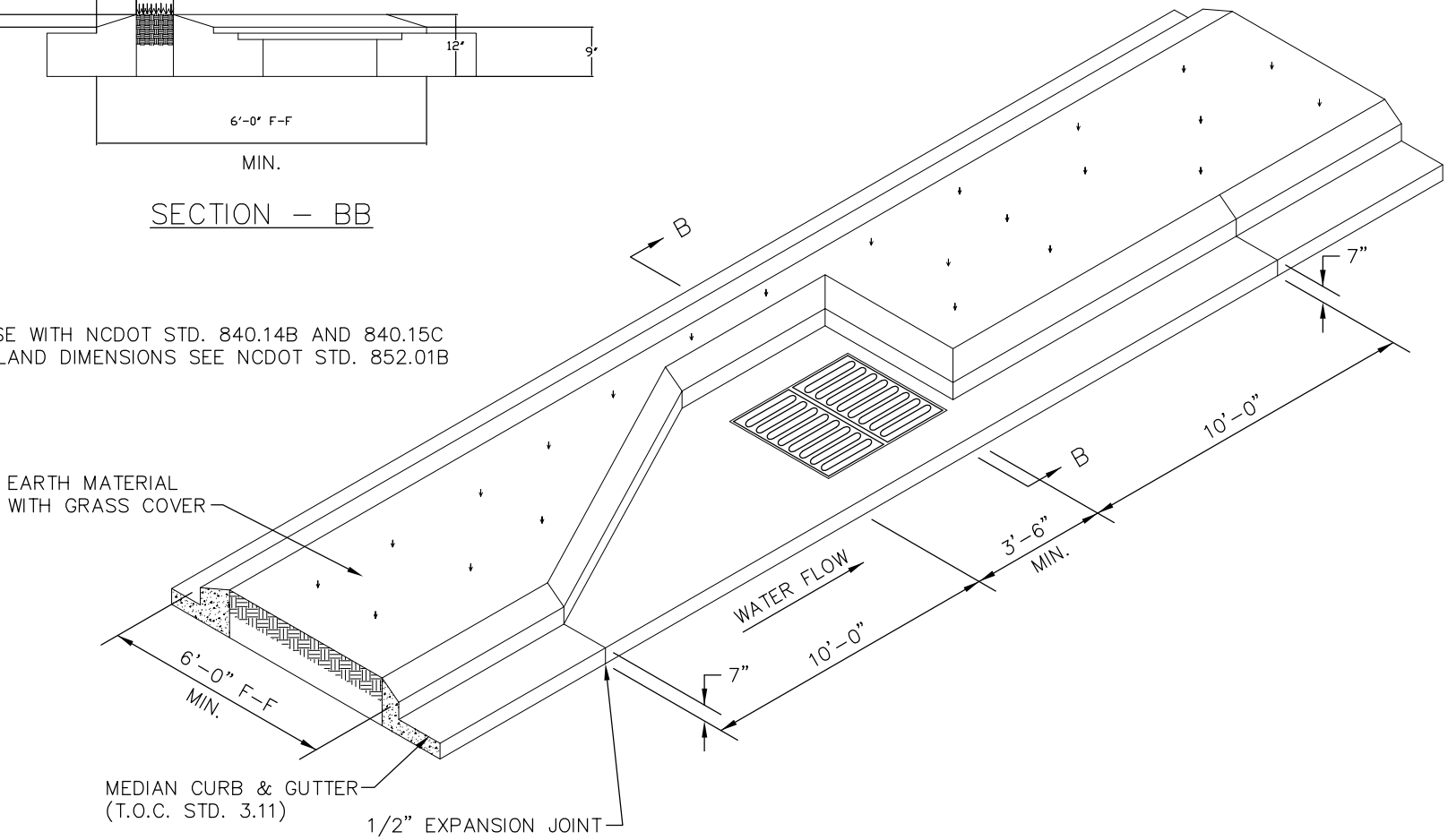


| REVISIONS | |
|---|---|
| DATE | DESCRIPTION |
| | |
| | |
| | |

ASHEVILLE

CITY OF ASHEVILLE, N.C.
ENGINEERING DEPARTMENT

# STANDARD MEDIAN CURB INLET

STD. No.

8.04C